3596 5 1/2 TON AIR LIFT JACK

PART			KIT INCLUDES
ORDER NUMBER	REF. #	QUANTITY IN UNIT	DESCRIPTION
35961	1	2	PAD ARM
N/A	3	8	LOCK WASHER
N/A	4	4	NUT
35965	5	2	LOW SADDLE ADAPTER
35966	6	2	HIGH SADDLE ADAPTER
N/A	7	1	CAP SCREW
N/A	8	1	FRONT PIN
N/A	9	1	RETAINING RING
N/A	10	2	BEARING
N/A	11	1	OIL PLUG
N/A	12	2	BEARING
N/A	14	2	BEARING
N/A	15	2	LEVELING LINK
N/A	16	4	BEARING
N/A	17	6	WASHER
N/A	18	4	RETAINING RING
N/A	19	1	ELBOW
N/A	20	1	NIPPLE
359621	21	1	VALVE, LONG HANDLE
359622	22	2	SADDLE PIN
359623	23	2	HANDLE GRIP
N/A	24	1	RETAINING RING
N/A	25	1	WASHER
359626	26	1	LIFTING ADAPTER - LEFT
359627	27	1	LIFTING ADAPTER-RIGHT
N/A	29	2	BEARING
N/A	30	2	CYLINDER PIN
359633	33	2	FRONT WHEEL
N/A	34	4	FLANGED BEARING
N/A	35	2	WASHER
N/A	36	2	RETAINING RING
N/A	38	2	CAP SCREW
N/A	39	4	COTTER PIN
N/A	40	4	WASHER
359641	41	2	PNEUMATIC WHEEL
N/A	43	3	LOCK WASHER
N/A	44	3	CAP SCREW
359645	45	1	CUP
359646	46	1	WIPER RING
N/A	47	2	CAP SCREW
N/A	49	1	CAP SCREW
359650	50	1	VALVE COVER
359651	51	2	HANDLE GRIP
359652	52	1	SAFETY CATCH HINGE
359653	53	1	RELEASE ROD
359654	54	3	WASHER
359655	55	2	SPLIT PIN
N/A	56	1	REAR AXLE
359657	57	2	REAR WHEEL
N/A	58	4	WASHER

DO NOT COPY OR DISTRIBUTE THIS MATERIAL WITHOUT PERMISSION OF AFF, INC.

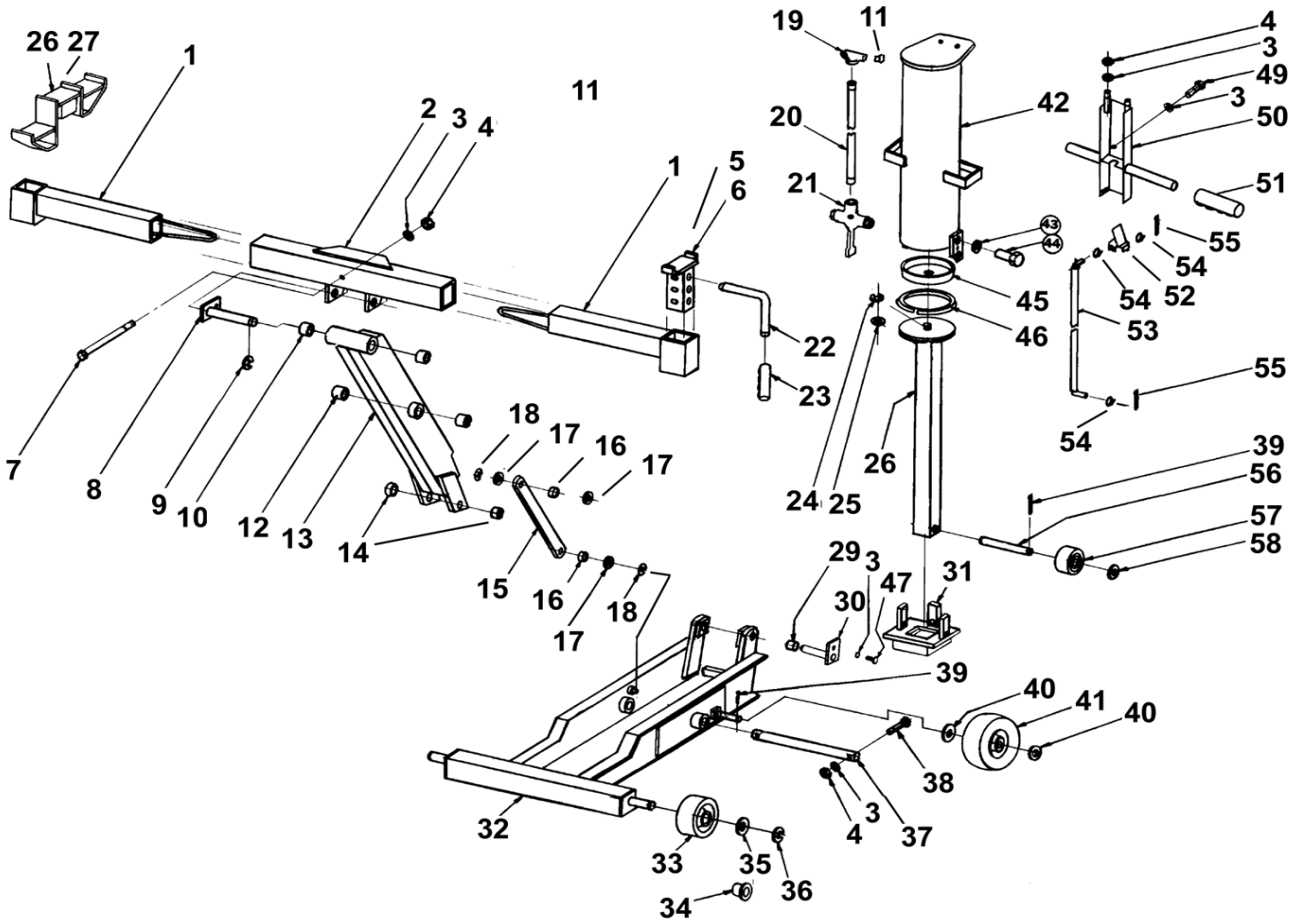
26 27
1
2
3
4
11
1
5
6
19
11
20
21
42
4
3
49
3
50
51
43
44
55
54
52
54
45
46
53
22
23
55
54
7
8
9
10
12
13
14
18
17
16
17
15
16
17
18
24
25
26
39
56
57
58
29
3
47
31
30
39
40
41
40
38
3
4
37
32
33
35
36
34